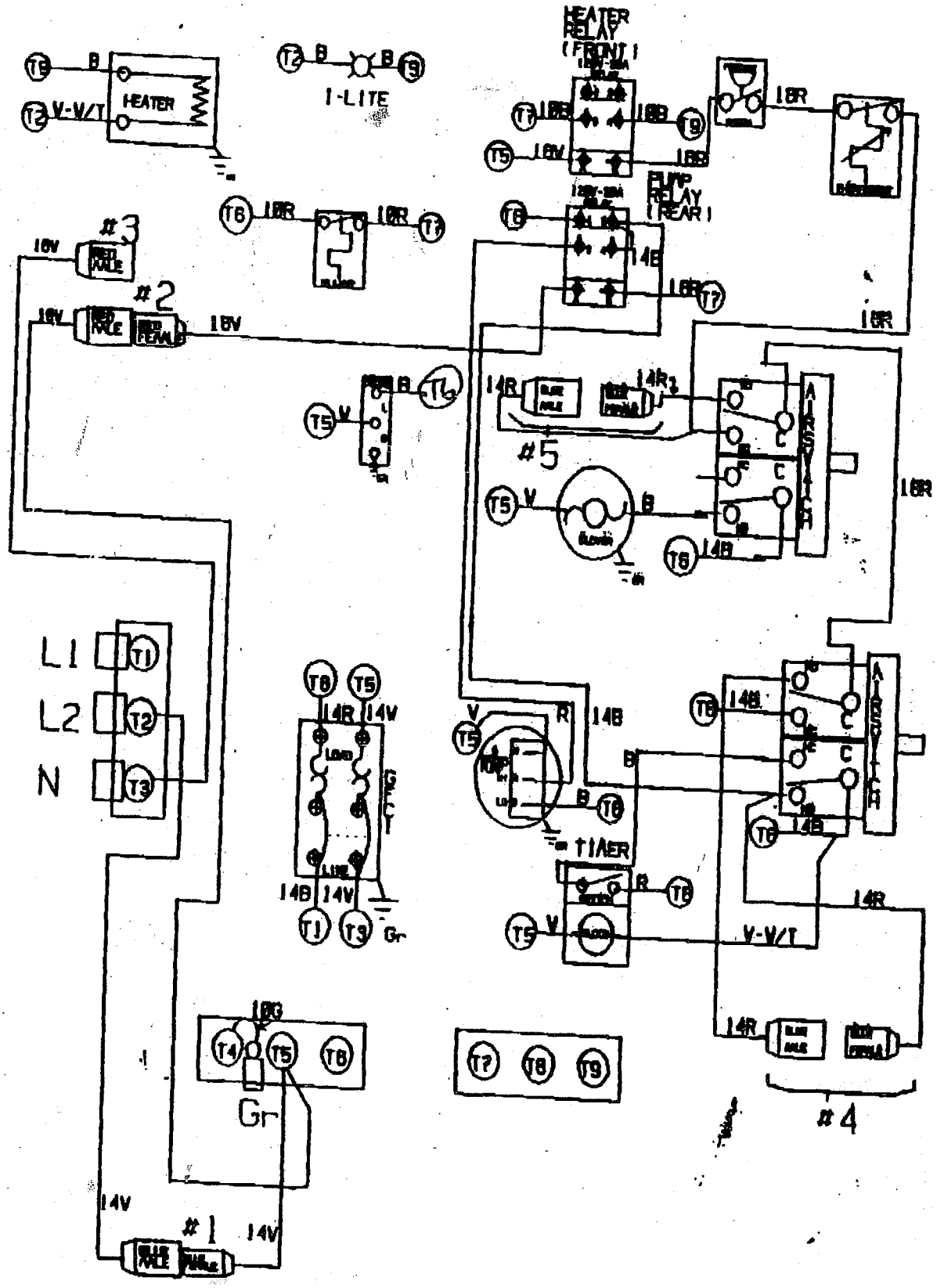
HEATER
V-V/T
I-LITE
HEATER RELAY (FRONT)
PUMP RELAY (REAR)
#3
#2
#5
#4
#1
L1
L2
N
TIMER
Gr
HERCULES PRODUCTS INC.
CONVERTIBLE V/TOTAL AIRSYSTEMS
12/11/89
406-3